LINEAR POWER SUPPLY

EXPERIMENT NUMBER 04

OBJECTIVES:

- Design and test an adjustable voltage regulator and dual regulated power supply circuits.
- Explain the operation of an adjustable voltage regulator and dual regulated power supply circuits.

APPARATUS:

DC power supply, multimeter, breadboard, LM317, LM7805, LM7905, 12 V/300 mA transformer, 4 × 1N4001 diodes, 220 Ω and 1 kΩ resistors, 2 kΩ potentiometer, 2 × 1000 µF, 2 × 10 µF and 1 µF/16 V capacitors, and Connecting wires.

THEORY AND DIAGRAMS:

Linear and switching power supplies are devices that convert electrical energy to provide a stable direct current (DC) output. A linear power supply achieves this by reducing the voltage of an incoming alternating current (AC) using a transformer and then rectifying and smoothing it.

The LM317 is an adjustable 3-terminal positive voltage regulator capable of supplying different DC voltage outputs other than the fixed voltage power supply of + 5 or + 12 V or as a variable output voltage from a few volts up to some maximum value, all with currents of about 1.5 A. Figure 1 shows a circuit diagram of an adjustable linear power supply constructed using LM317.

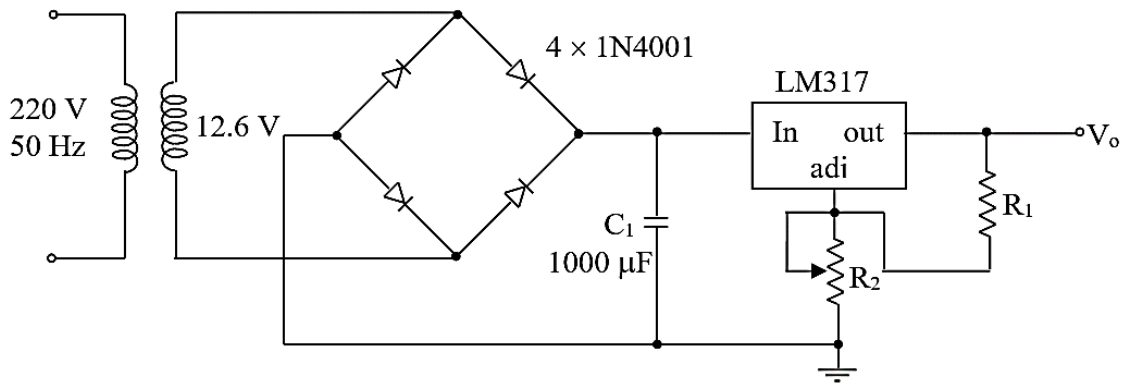

Figure 1

The voltage across the feedback resistor R_1 is a constant 1.25 V reference voltage, V_{ref} produced between the "output" and "adjustment" terminal. The adjustment terminal current is a constant current of 100uA. Since the reference voltage across resistor R_1 is constant, a constant current will flow through the other resistor R_2, resulting in an output voltage of:

$$V_o = 1.25\left(1 + \frac{R_2}{R_1}\right)$$

Figure 2 shows an extended version of the circuit in Figure 1, with C_2 and C_3 attached in parallel with the load and R_2, respectively.

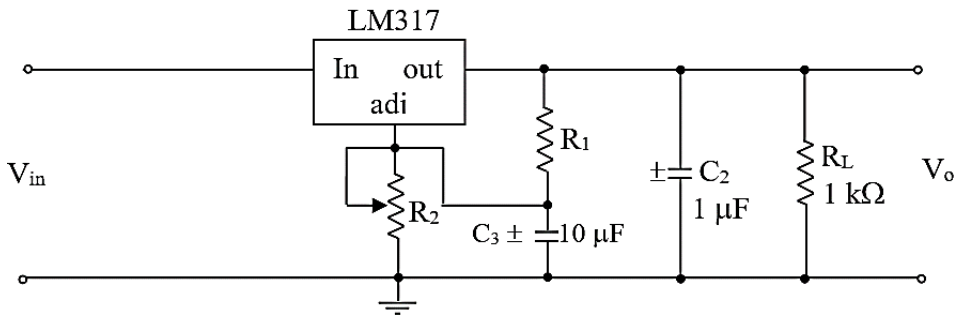

Figure 2

Dual power supplies are circuits that generate two different output voltages from a single input source. There are numerous types and configurations possible. The most common configuration provides two different positive DC voltage outputs or two equal magnitude and opposite polarity DC voltage outputs. Figure 3 shows a dual regulated power supply circuit constructed using LM7805 and LM7905 regulators. This power supply can be used to supply a dual regulated voltages of + 5 V and – 5 V with respect to the ground terminal.

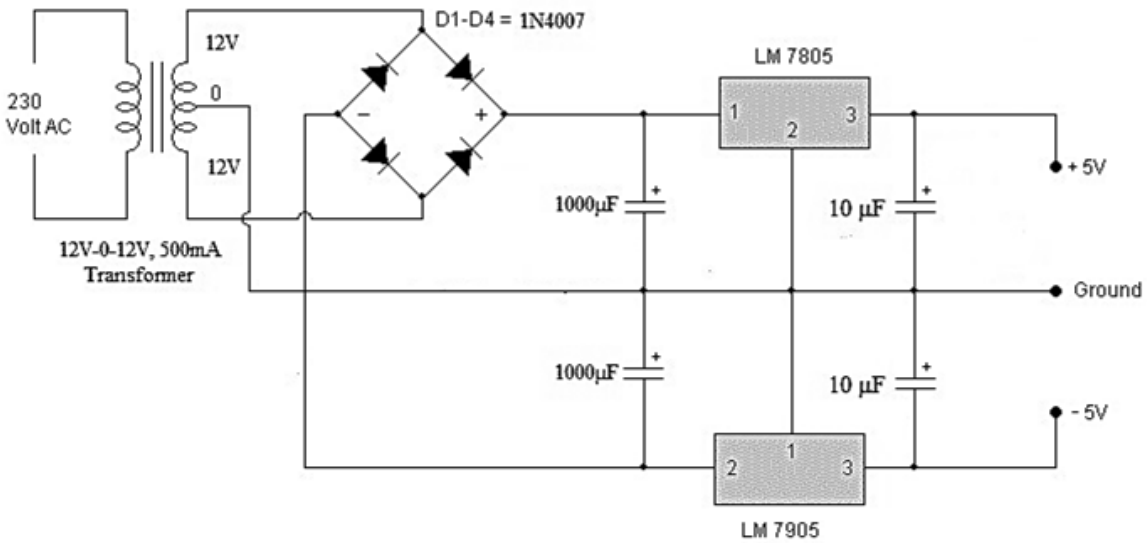

Figure 3

PROCEDURE:

1. Connect the circuit shown in Figure 1. Use 220 Ω resistor and 2 kΩ potentiometer as R_1 and R_2, respectively.
2. Connect the digital multimeter across the output terminals. Adjust the potentiometer R_2 until the output voltage is 5 V.
3. Connect 1 kΩ resistor R_L as the load across the output terminals, and again measure the output voltage with the digital multimeter. Record the measured value as indicated in the sample data sheet of Table 1.
4. Calculate the % regulation using the following equation.

$$Regulation\ (\%) = \frac{Output\ voltage\ without\ load - output\ voltage\ with\ load}{Output\ voltage\ without\ load} \times 100$$

5. Remove the AC voltage from the circuit of Figure 1 and then disconnect potentiometer R_2 from it. Measure the value of R_2 using a digital multimeter. Enter the measured value.
6. Also calculate the value of R_2 using the given equation and compare it with the measured value.
7. Repeat steps 2 to 6 for V_{out} = 10 V.
8. Reconnect the circuit as shown in Figure 1 for 10 V. However, connect the capacitor C2 across the output terminals this time, as shown in Figure 2. Then observe the output waveform using the oscilloscope. Draw the output waveform. Measure the output voltage using a digital multimeter.
9. Now connect capacitor C_3 across R_2, as shown in Figure 2. Again, using the oscilloscope, observe the output waveform and draw it. Measure the output voltage using a digital multimeter.
10. Now, construct the dual regulated power supply circuit as shown in Figure 3 and observe the output voltages to verify the circuit's operation. Tabulate your results.

Sample Datasheet:

Table 1

Output voltage V_{out} (V)		**% Regulation (calculated)**	**R_2 (Ω)**	
Without R_L	**With R_L**		**Calculated**	**Measured**
5 V				
10 V				

DISCUSSION:

1. Compare and contrast fixed and adjustable voltage regulators.
2. Explain the operation of the circuit shown in Figure 1.
3. In the circuit of Figure 2, what are the functions of capacitors C_2 and C_3?
4. When high values of external capacitors are used with the LM317 for outputs greater than 25 V, it is sometimes necessary to add protection diodes to prevent the capacitors from discharging through low current points into the regulator. Include the diodes with proper connections in the circuit of Figure 2 and redraw it.
5. Compare measured and calculated values of resistor R_2 and comment on any differences.
6. Discuss the operation and applications of dual regulated power supplies.
7. Discuss the differences between linear and switching power supplies.